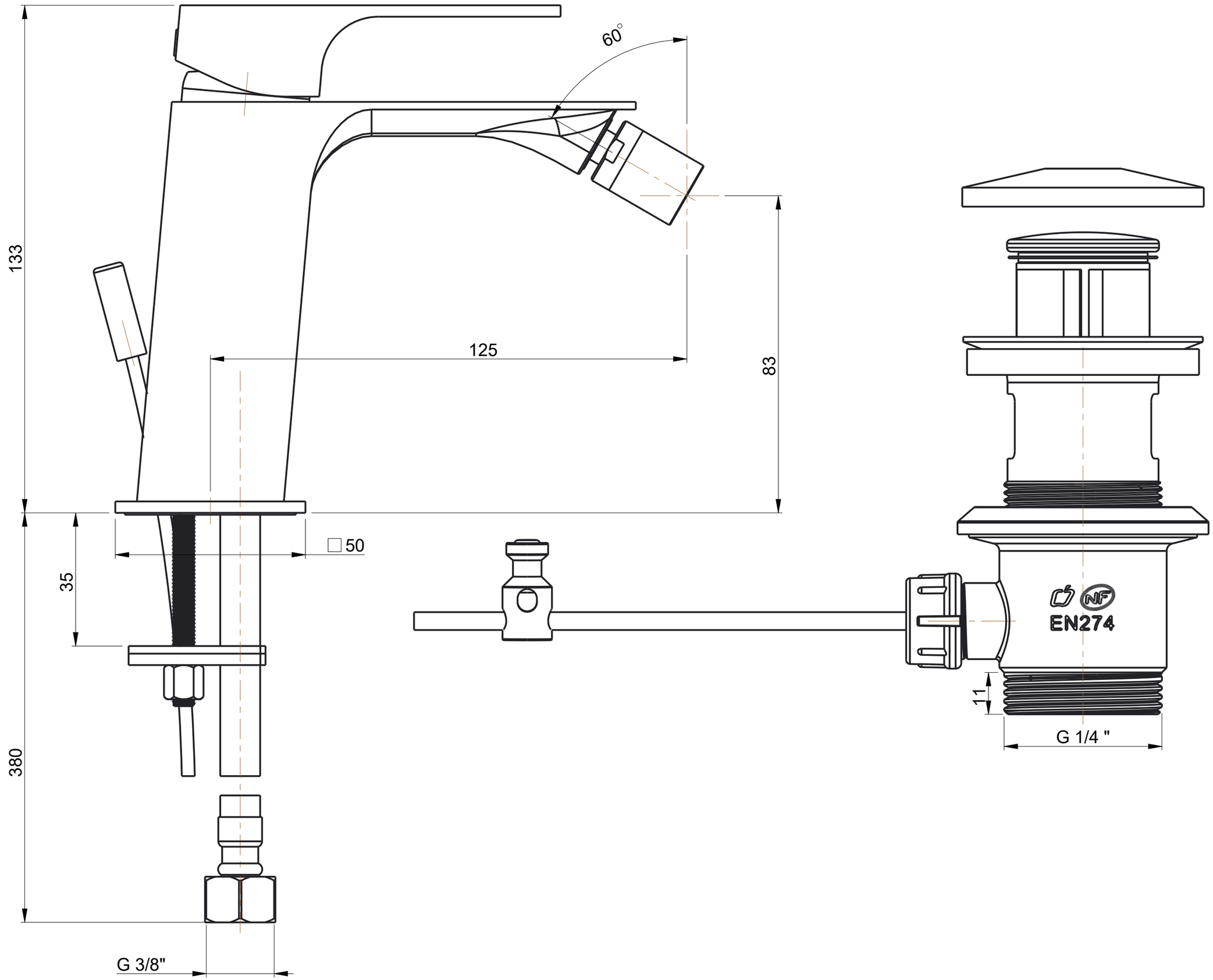

V2CR306